DWG NO.

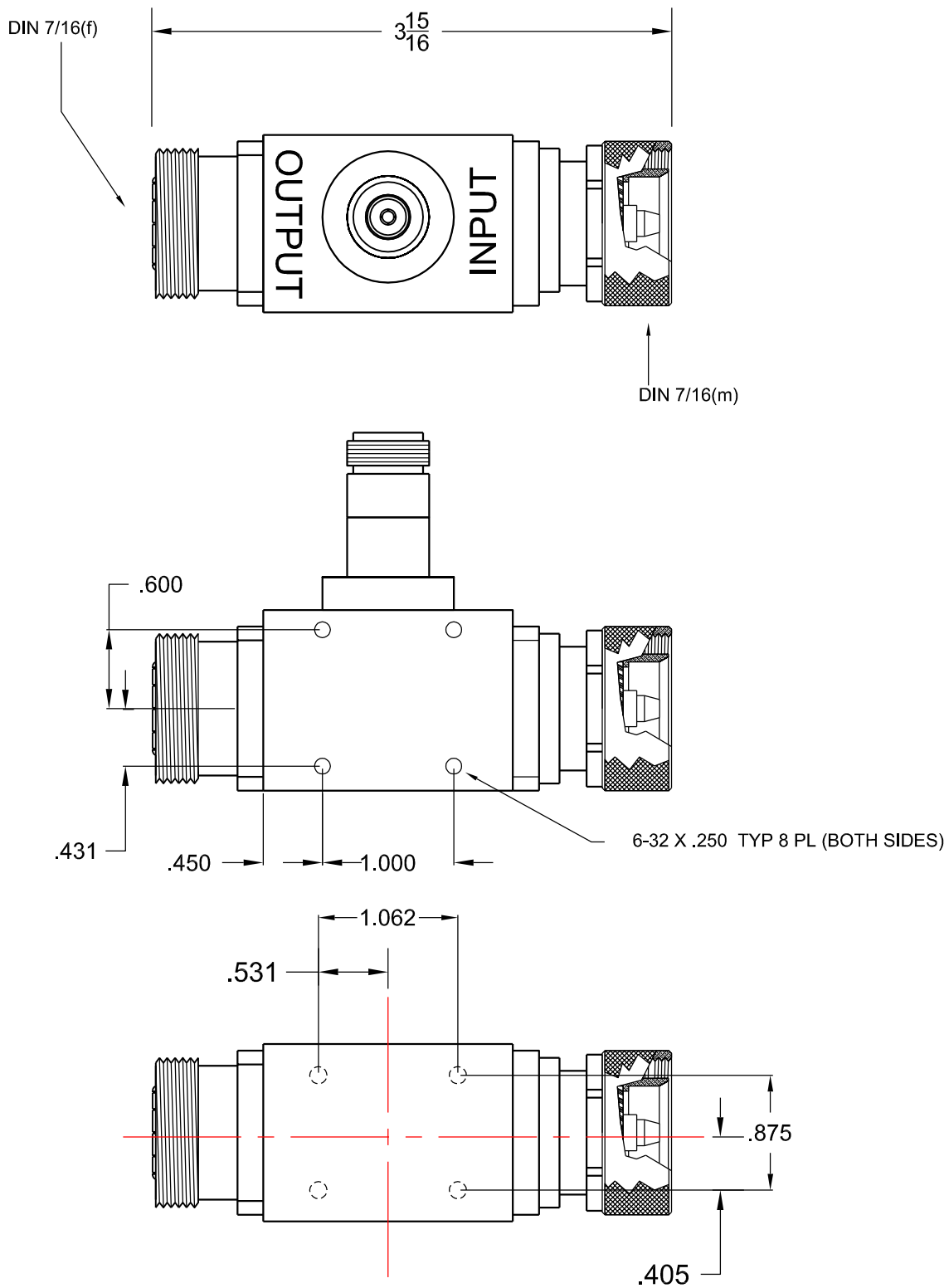

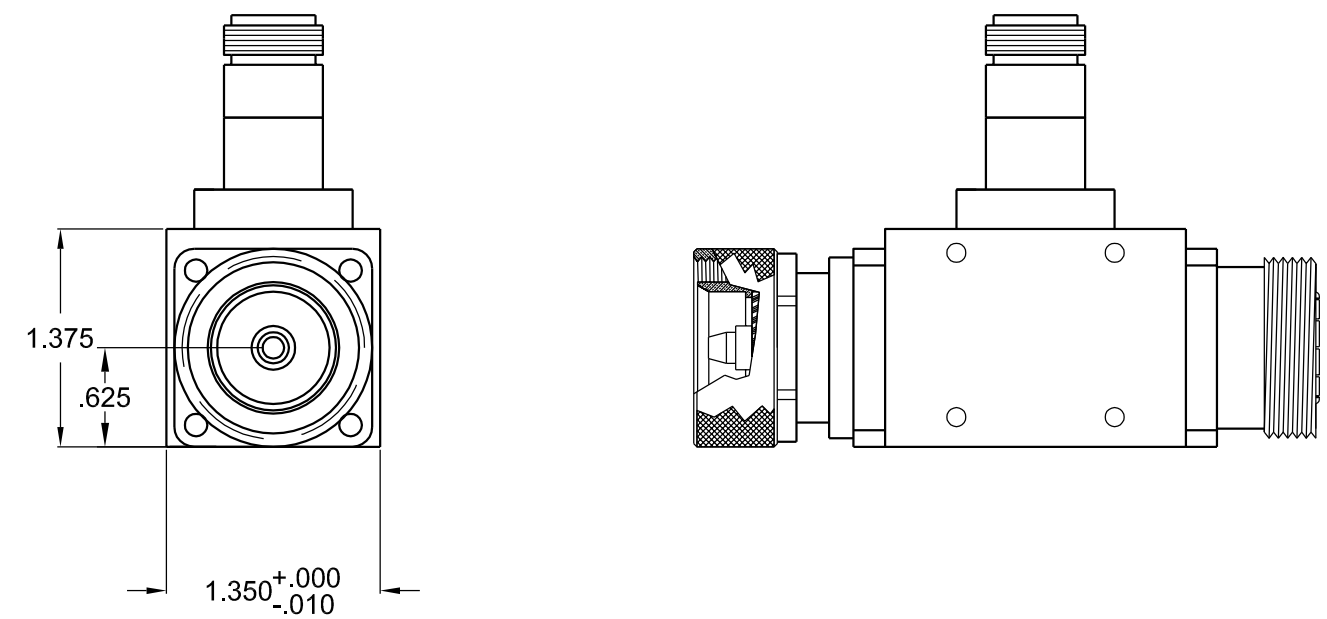

HOLE	QTY	DESCRIPTION
B	.	.
A	.	.

TOLERANCES UNLESS NOTED
.XX ± .01 .XXX ± .005
ANGLES ± 1 DEG
ALL √ INDICATES 3.2 MICRONS

ALL DIMENSION IN INCHES UNLESS OTHERWISE NOTED

MUST COMPLY WITH WORKMANSHIP STANDARDS SPEC

NOTES
1.
.
.
.
.
.

REVISION LTR	DESCRIPTION	DATE	ENG

CONNECTICUT MICROWAVE CORPORATION

Connecticut Microwave Corp.
1486 Highland Ave.
Cheshire, Connecticut 06410

THIS DOCUMENT CONTAINS PROPRIETARY DATA OF THE CONNECTICUT MICROWAVE CORPORATION. NO DISCLOSURE, REPRODUCTION, OR USE OF ANY PART THEREOF MAY BE MADE EXCEPT BY WRITTEN PERMISSION.

DRAWN BY: RR
DATE: 10/5/06
ENG CHK
PROJ ENG
MFG ENG
SHEET OF

TITLE
OUTLINE UNI-DIRECTIONAL COUPLER

DWG NO. CM364.0034
REV